RevNo	Revision note	Date	Signature	Checked

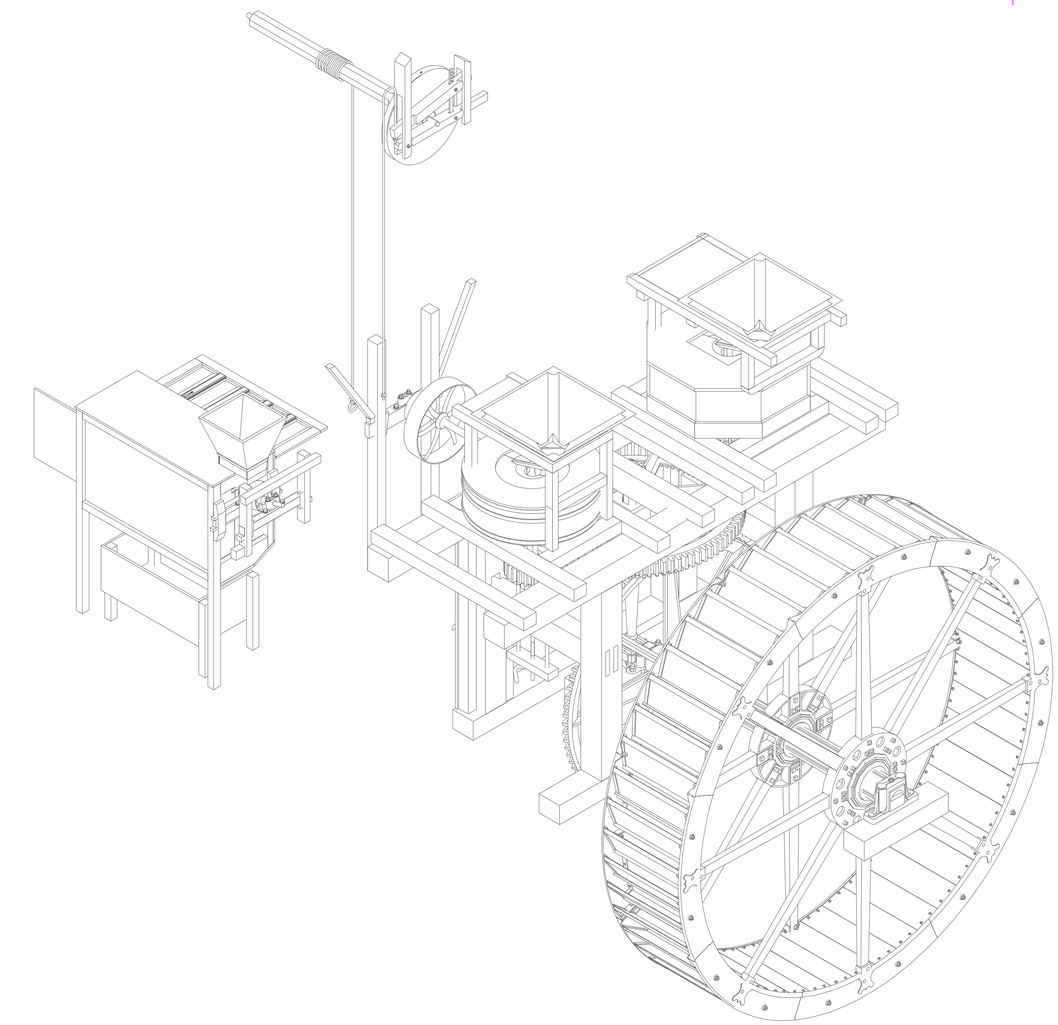

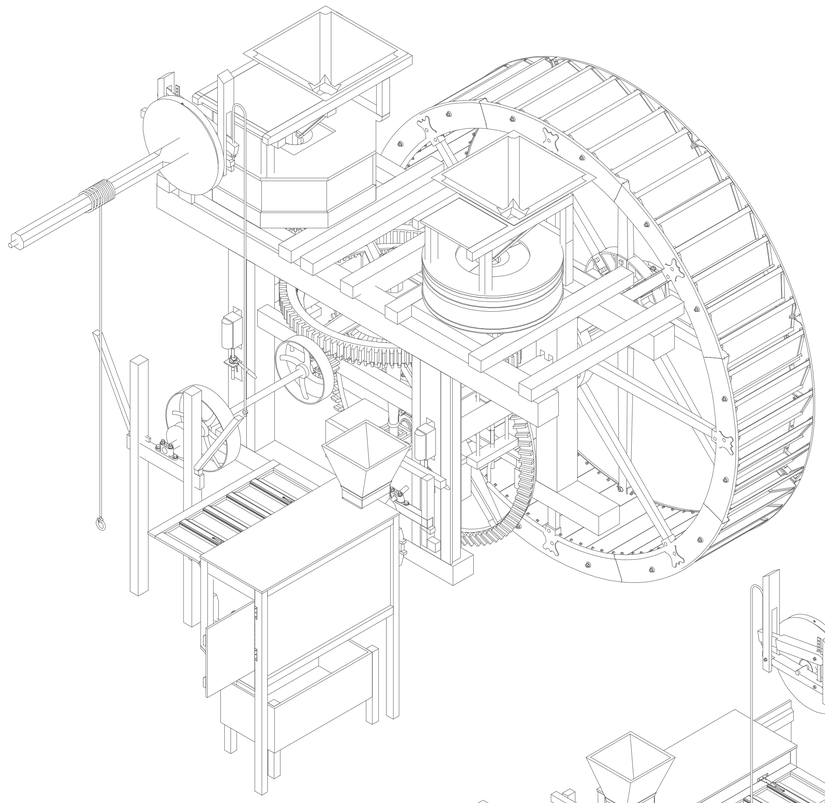

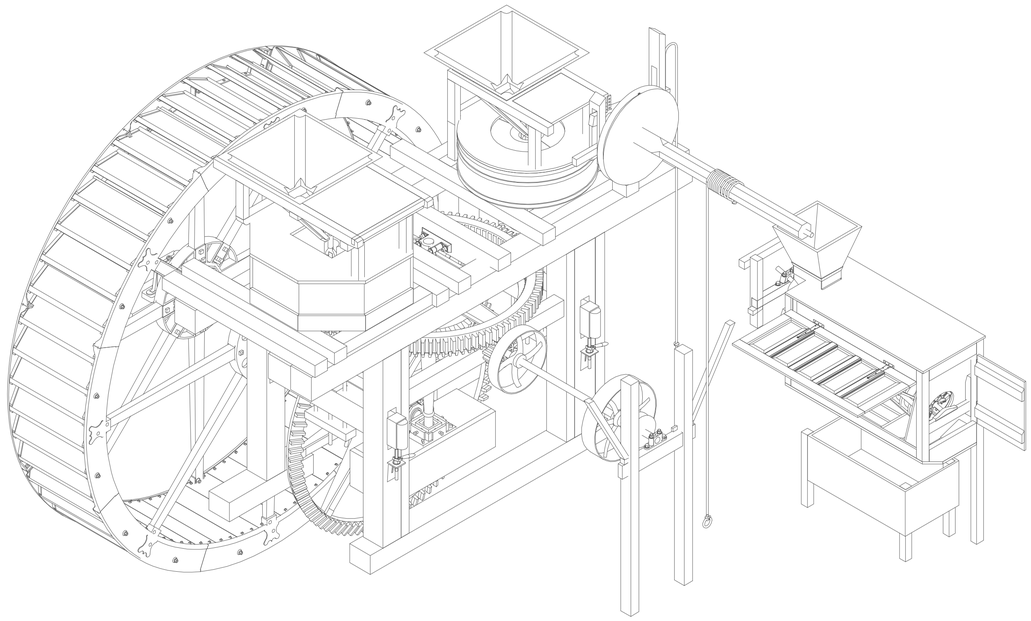

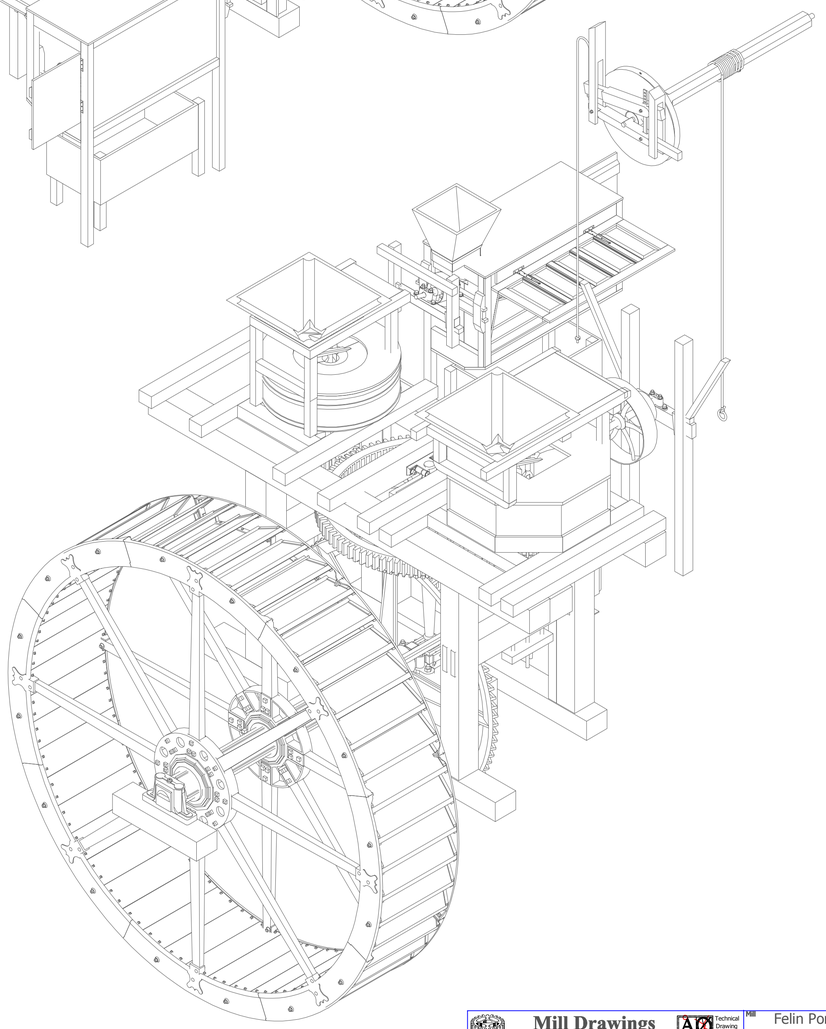

Mill Drawings
milldrawings@gmail.com www.a0tech.co.uk
A0 Technical Drawing Services
Mill Drawings is a trade name of A0 Technical Drawing Services Ltd. Registered in England No. 7246

in conjunction with
Cymdeithas Melinau Cymru ~Welsh Mills Society

Mill	Felin Pont-faen, Llangwyryfon, Aberystwyth, Ceredigion. SY23 4HA.
Title	3d views

Drawn	Date	Scale		Mill Ref	Drg No
John Brandrick	Sept 2010	1-50@A1	Map Ref SN575E Grid SN59807073	NPRN 24747	24747-003

RevNo	Revision note	Date	Signature	Checked

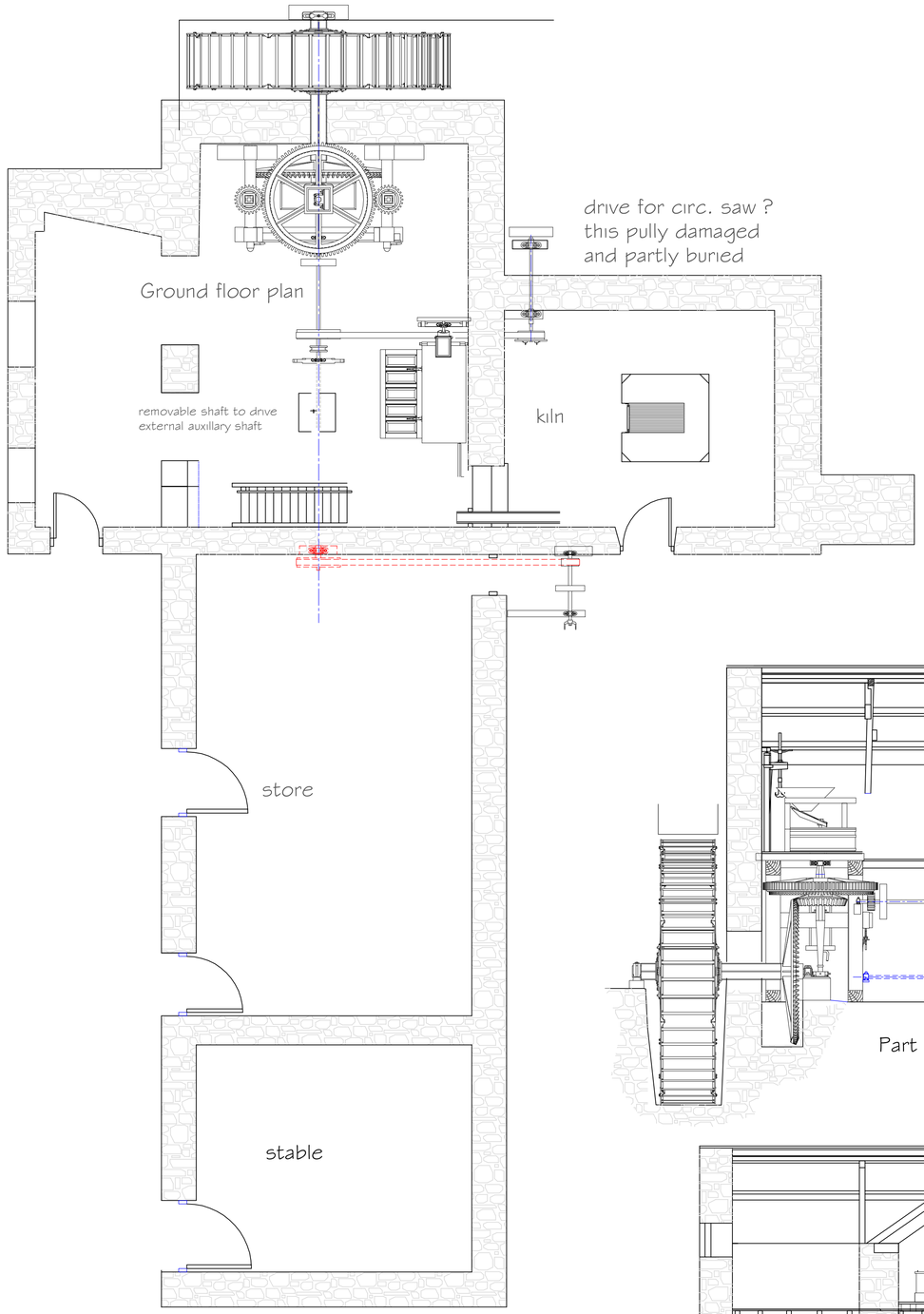

Ground floor plan

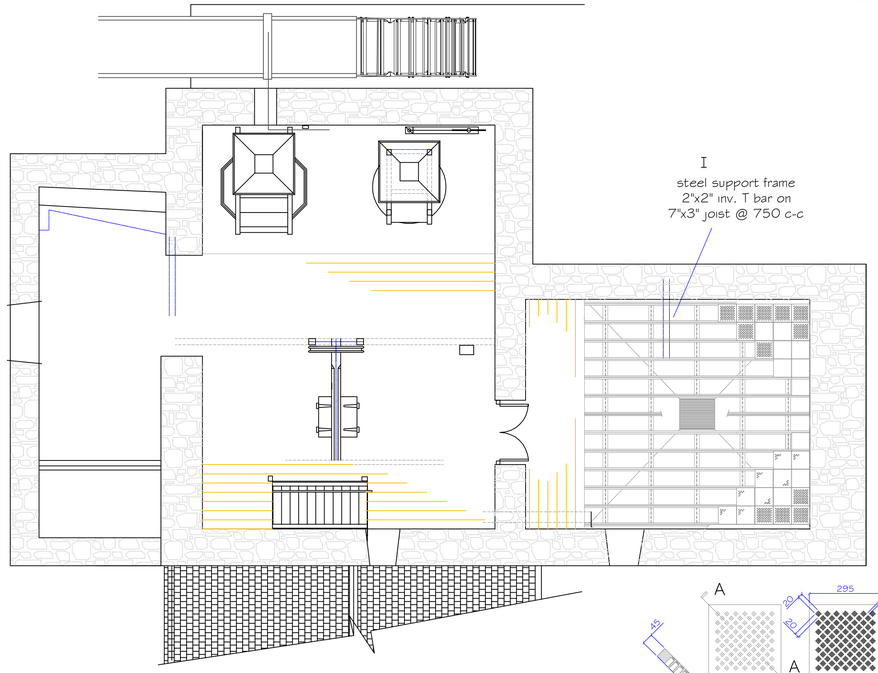

Part 1st floor plan

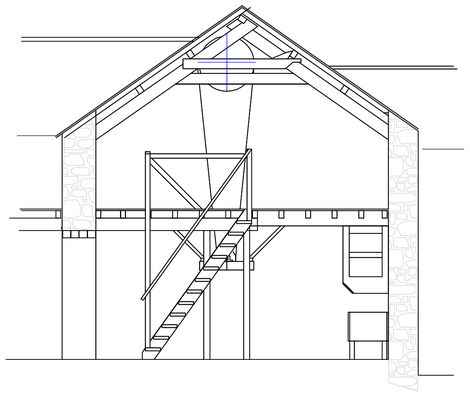

Cross section

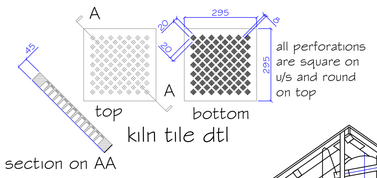

kiln tile dtl

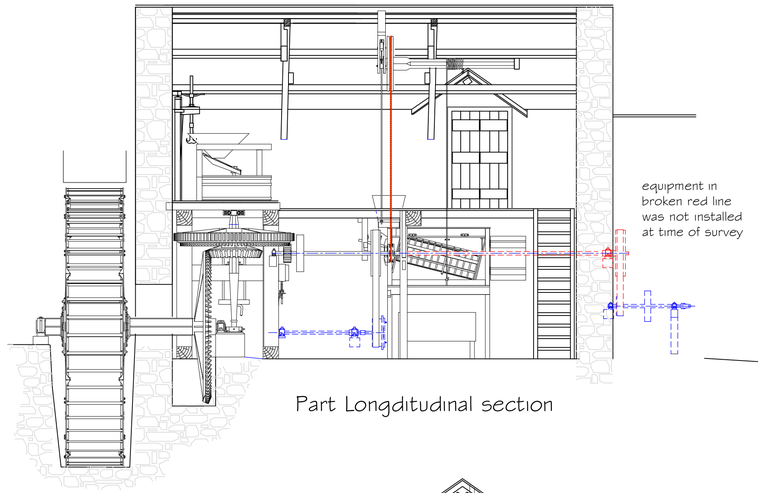

Part Longditudinal section

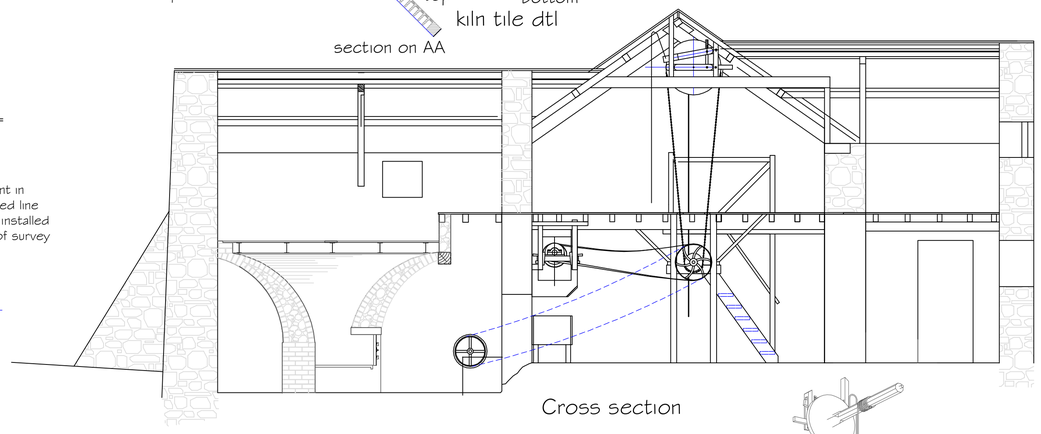

Cross section

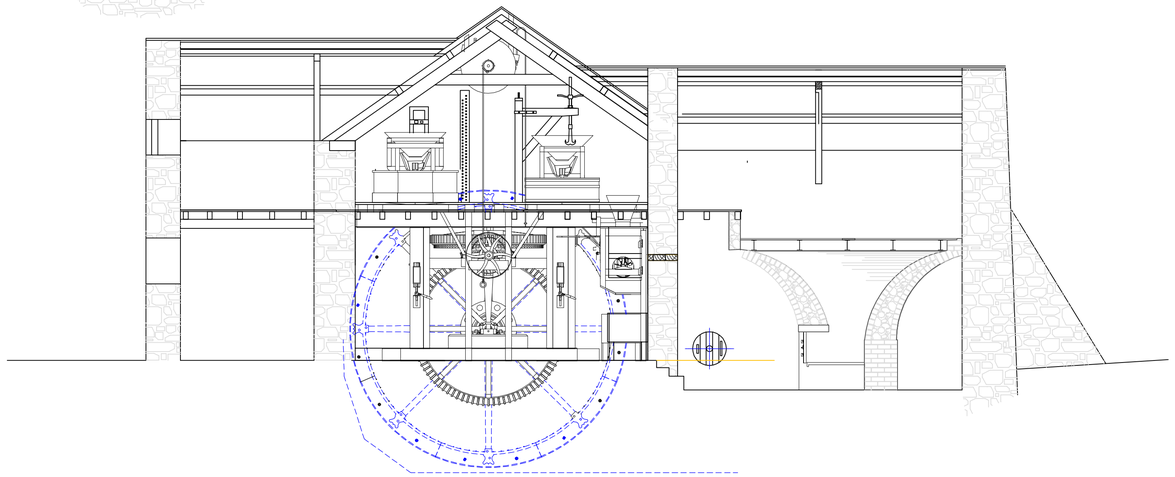

Cross section

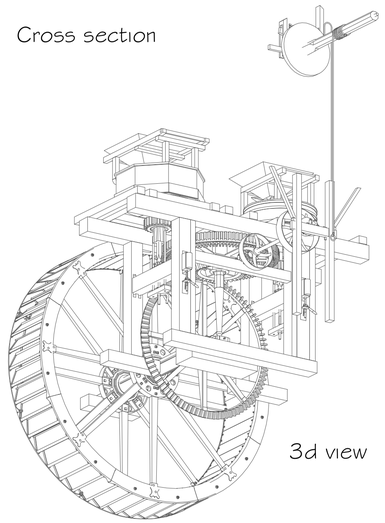

3d view

Mill Drawings milldrawings@gmail.com www.a0tech.co.uk — A0 Technical Drawing Services

in conjunction with Cymdeithas Melinau Cymru ~Welsh Mills Society

Mill	Felin Pont-faen, Llangwyryfon, Aberystwyth, Ceredigion. SY23 4HA.
Title	General Arrangement

Drawn	Date	Scale		Mill Ref	Drg No
John Brandrick	Sept 2010	1-50@A1	Map Ref SN575E Grid SN59807073	NPRN 24747	24747-002